Materials:
Boltingframe: Aluminum
Glassframe: Stainless steel
Screwinglist: Stainless steel
Hinge pins: Stainless steel
U-Sealant: Rubber
Glasspane: Toughened glass,
tested acc. to ISO 614
Screws: Stainless steel DIN 966, M6×16/M6×20
Fasteners: Stainless steel

Hole in plate

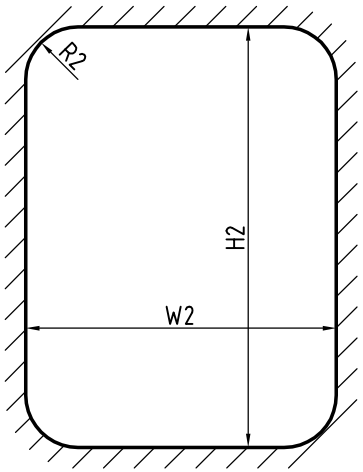

Left hinged, OLW is drawn
Righ hinged is opposite

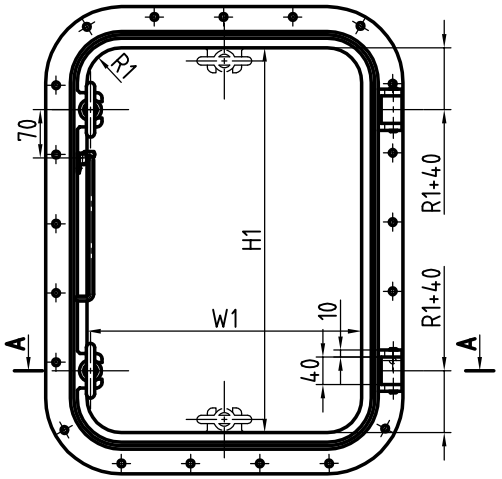

A-A

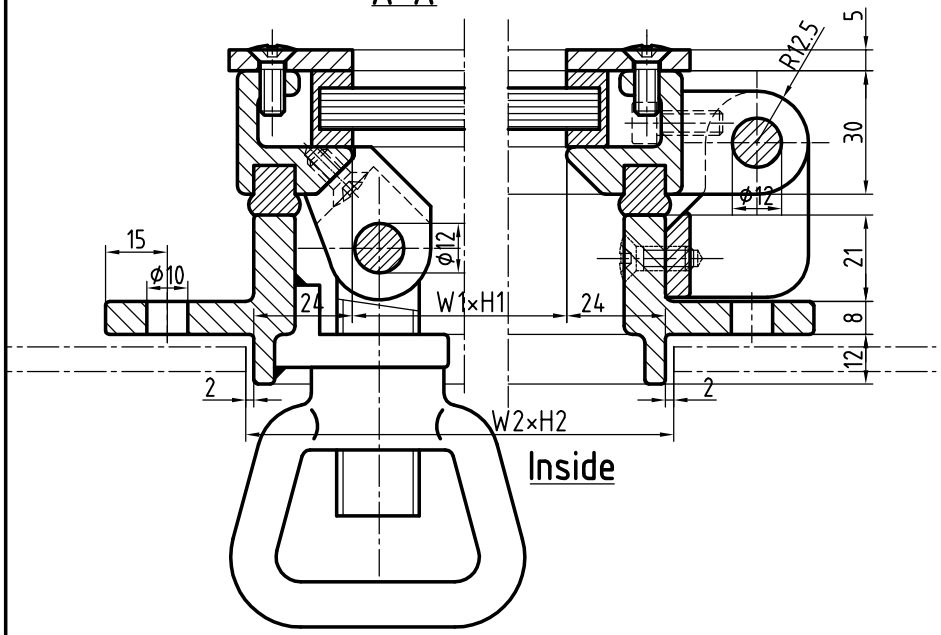

Inside

* with 6 fasteners

No	Nominal size	Hole in plate	Radius		Glass thick.	
	W1×H1	W2×H2	R1	R2	type E	type F
1	300×425	352×477	50	76	10	10
2	355×500	407×552	50	76	10	10
3	400×560	452×612	50	76	12	10
4	450×630	502×682	100	126	12	10
5*	500×710	552×762	100	126	15	10
6*	560×800	612×852	100	126	15	10

PROMAP Ltd.
Bydgoszcz, POLAND

Drawn: Skemski
Data: 28-04-2014

Title: **Outside hinged window OW**

ISO 3903

Tel: +48 52 3216131 Fax: +48 52 3764726
Email : promap@promap.eu

AutoCAD file no. **WHB-02.1**